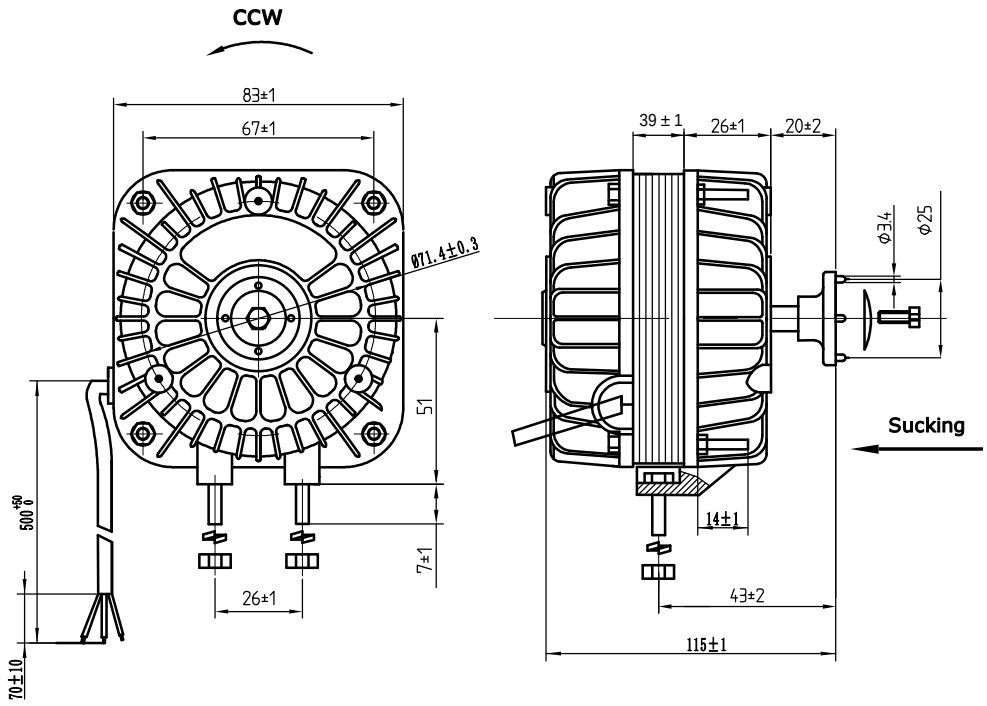

Motor	Shaded pole motor
Motor type	YZF 25-40
Voltage/Frequency (V/Hz)	220-240V/50
Current (A)	0.51A
Input power (W)	25/90W
Speed (r/min)	1300
Fan blades	Φ300 / 22 °
Rotation	CCW (looking towards the shaft)
Protestion class	IP 42
Airflow direction	Sucking (looking towards the stator)
Motor protetion	Impedance protected
Insulation class	B
Temperature rise	60K
Operation type	S1
Ambient temperation	-30°C +50°C
Bearings	Sleeve bearings
Lubricating oil	284#
Electrical connection	3G 0.3mm² lead wire 500-550mm free length
HI-POT Test	1800V 1s
Approvals	CE
Weight per unit	1.9KG
Packing	12PCS/CTN

WIRE CONNECT

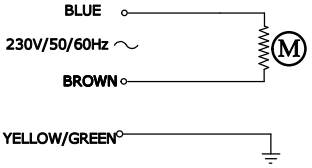

YZF 25-40 25/90W
220V-240V 50/60Hz
IP42 1300r/min CL.B
CE
08/21

AFrost

YZF 25-40